SPECIFICATIONS

CIRCUIT DESIGN: Models PT-25, Codes 121 and 122, Pt-27, Codes 121 and 122, and PT-39 are five tube superheterodyne radios covering a frequency range from 540 to 1720 K. C. These models are similar with the exception of the cabinets. Codes 121 and 122 of Models PT-25 and PT-27 differ also in the type of cabinet used.

The circuit diagram and parts list shown below applies to all models.

INTERMEDIATE FREQUENCY: 470 K. C.

POWER SUPPLY: The receivers are designed for operation on either a 115 volt alternating current (A. C.) or 115 volt direct current (D. C.)

Note—If no sound is heard on D. C. circuits after the tubes are sufficiently heated, reverse the plug of the cable in the outlet. If a slight hum is heard when using an A. C. power supply, the power plug should also be reversed.

PHILCO TUBES USED: One 7A8, converter; one 7B7, I. F. amplifier; one 7C6, 2nd detector, 1st audio, A. V. C.; one 35A5, audio output and one 35Z3, rectifier.

AERIAL: A twenty foot indoor aerial wire is attached to the radio for average receiving conditions. To obtain best reception in apartment houses, hotels or steel reinforced buildings, the Philco Utility Aerial, Part No. 40-6384 is recommended. A ground is not necessary on these models.

ALIGNING PROCEDURE: The instructions for adjusting the R. F. and I. F. compensators will be found on page 7.

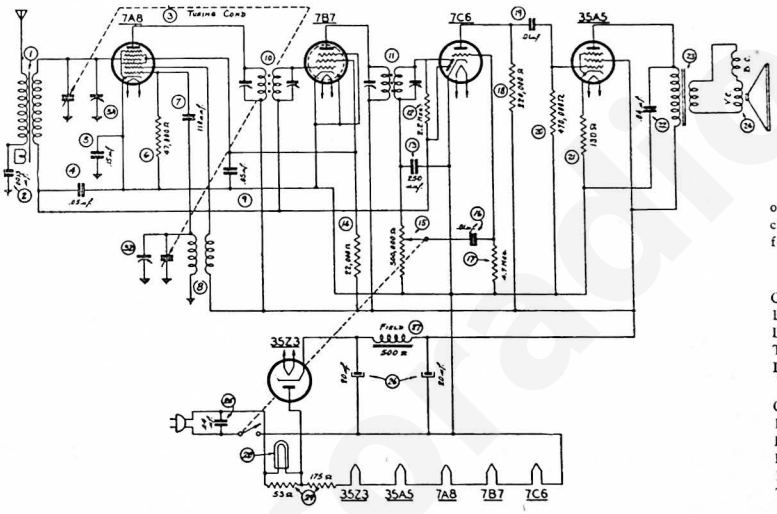

PRODUCTION CHANGES

MODELS PT-25, PT-27

The cabinet, dial and several parts were changed on these models. The code number was also changed from 121 to 122. These changes are as follows.

MODEL PT-25

	Code 121	Code 122
Cabinet	10364A	10455A
Baffle and Cloth Assembly	40-6526	40-6520
Dial	27-5553	27-5572
Tuning Condenser	31-2427	31-2447
Instructions	39-6568	39-6568A

MODEL PT-27

Cabinet	10364B	10455B
Baffle and Cloth Assembly	40-6526	40-6520
Dial	27-5553	27-5572
Instructions	39-6568	39-6568A
Knob Assembly	27-4810	27-4950
Tuning Condenser	31-2427	31-2447

REPLACEMENT PARTS

SCHE. No.	DESCRIPTION	PART No.
1	Antenna Transformer	32-3151
2	Tubular Condenser (.0015 mf., 200 V.)	30-4555S
3	Tuning Condenser (Code 121)	31-2427
	Tuning Condenser (Code 122)	31-2447
4	Tubular Condenser (.05 mf., 200 V.)	30-4519S
5	Tubular Condenser (.15 mf., 400 V.)	30-4505S
6	Resistor (47,000 ohms, ¼ watt)	33-347154
7	Mica Condenser (110 mmf.)	30-1130
8	Oscillator Transformer	32-3152
9	Tubular Condenser (.05 mf., 200 V.)	30-4519S
10	1st I. F. Transformer	32-3149
11	2nd I. F. Transformer	32-3150
12	Resistor 2.2 meg., ¼ watt)	33-522154
13	Mica Condenser (250 mmf.)	61-0033
14	Resistor (22,000 ohms, ½ watt)	33-322334
15	Volume Control (500,000 ohms)	33-5306
16	Tubular Condenser (.01 mf., 200 V.)	30-4479S
17	Resistor (4.7 meg., ¼ watt)	547154
18	Resistor (220,000 ohms, ¼ watt)	33-422154
19	Tubular Condenser (.01 mf., 400 V.)	30-4572S
20	Resistor (470,000 ohms, ¼ watt)	33-447154
21	Resistor (130 ohms, ½ watt)	33-113336
22	Tubular Condenser (.04 mf., 400 V.)	30-4119S
23	Output Transformer	
	Part of Speaker No. 36-1469-1	32-8047
	Part of Speaker No. 36-1469-9	32-8044
	Part of Speaker No. 36-1469-2	32-8044
24	Speaker	36-1469
25	Tubular Condenser (.04 mf., 400 V.)	30-4119S
26	Electrolytic Condenser (20-20 mf., 150 V.)	30-2382
27	Field Coil	Part of Speaker No. 36-1469
28	Pilot Lamp	34-2068
29	Line Resistor	33-3367

MISCELLANEOUS PARTS

Cabinet (PT-25, Code 121)	10364A
Cabinet (PT-27, Code 121)	10364B
Cabinet (PT-25, Code 122)	10455A
Cabinet (PT-27, Code 122)	10455B
Cabinet (PT-39, Code 121)	10448A
Cardboard Back (PT-25, PT-27)	27-9511
Cardboard Back (PT-39)	27-9559
Cone Assembly	
(for Speaker 36-1469-9)	36-4113
(for Speaker 36-1469-1)	36-4115
(for Speaker 36-1469-2)	36-4132
Cable (Power)	L-3199
Dial (PT-25, PT-27, PT-39, Code 121)	27-5553
Dial (PT-25, PT-27, Code 122)	27-5572
Dial Drive Shaft Assembly	31-2355
Dial Drive Cord Assembly	31-2358
Dial Window	27-5472
Grille Cloth and Gasket	
(PT-25-27, Code 121)	318-1120
(PT-25-27, Code 122)	40-6520
Knob Assembly	
(PT-25, PT-39, Code 121)	27-4809
(PT-27, Code 121)	27-4810
(PT-27, Code 122)	27-4950
Pointer (Dial)	27-4891
Spring (Dial Drive Cord)	28-8954
Socket Assembly (Pilot Lamp)	38-9825
Socket (Tubes)	27-6130
Snap Fastener (Dial Mounting)	56-1387